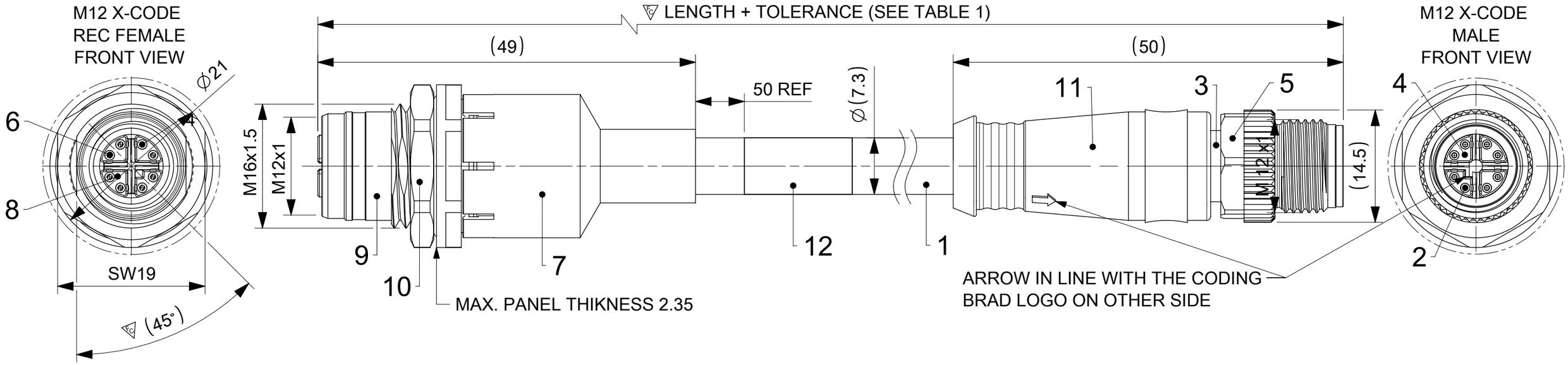

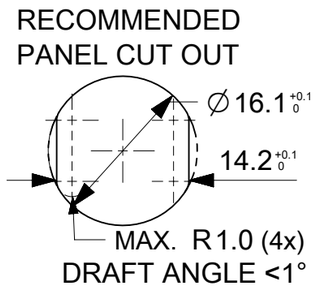

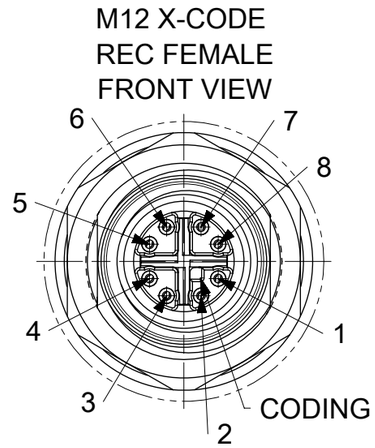

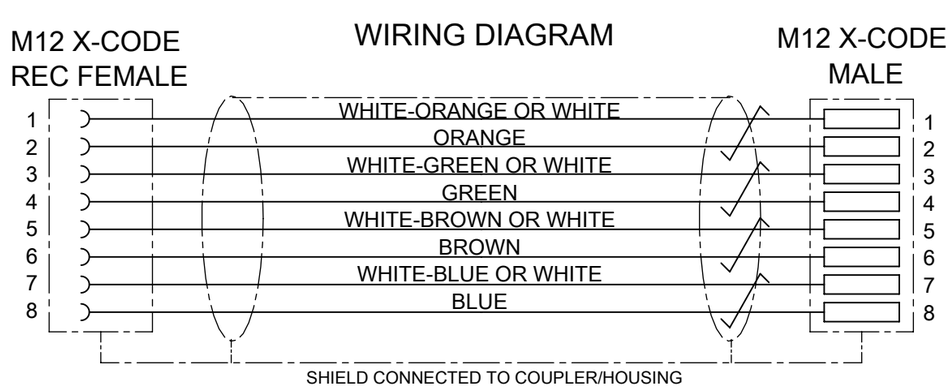

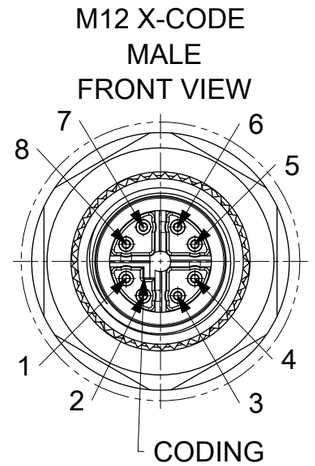

NOTES:
VOLTAGE RATING: 48 V
CURRENT RATING: 0.5 A
TEMPERATURE RATING:
STATIC: -40 °C TO 80 °C
DYNAMIC: -25 °C TO 80 °C
IP RATING: IP 67 (IN MATED AND LOCKED CONDITION)
TRANSMISSION CHARACTERISTICS ACCORDING TO ISO/IEC 11801 CLASS E_A CHANNEL,
WITH INSERTION LOSS BEING IGNORED FOR CABLE LENGTHS ∠1 m OR ∠65 m
POWER TRANSMISSION TEST ACCORDING IEEE802.3bt UP TO 65m LENGTH
PACKAGING: CORDSETS ARE PACKED IN A POLYBAG

TABLE 1

MOLEX P/N	ENGINEERING NO.	DESCRIPTION	LENGTH
1203410885	ERWKEU7021M005	M12 CAT6A REC-F/M XC ST TPE GREEN TEAL SIMILAR RAL6026	500
1203410886	ERWKEU7021M010	M12 CAT6A REC-F/M XC ST TPE GREEN TEAL SIMILAR RAL6026	1000
1203410887	ERWKEU7021M020	M12 CAT6A REC-F/M XC ST TPE GREEN TEAL SIMILAR RAL6026	2000
1203410888	ERWKEU7021M050	M12 CAT6A REC-F/M XC ST TPE GREEN TEAL SIMILAR RAL6026	5000
1203410889	ERWKEU7021M100	M12 CAT6A REC-F/M XC ST TPE GREEN TEAL SIMILAR RAL6026	10000

BILL OF MATERIAL

ITEM	QTY	DESCRIPTION	MATERIAL	FINISH/COLOR
1	1	CABLE 4X(2X AWG26/7) CAT 7	TPE	GREEN TEAL SIMILAR RAL6026
2	8	CONTACT M12 XC MA	BRASS	Au PLATED
3	1	SHIELD SLEEVE MA	Zn DIE-CAST	Ni PLATED
4	1	INSERT M12 XC MA	PA	BLACK
5	1	M12 HYBRID COUPLING NUT	BRASS	Ni PLATED
6	8	CONTACT M12 XC FE	BRASS	Au PLATED
7	2	SHIELD SLEEVE FE	Zn	Ni PLATED
8	1	INSERT M12 XC FE	PA	BLACK
9	1	SHELL M12 XC FE	BRASS	Ni PLATED
10	1	LOCKNUT	BRASS	Ni PLATED
11	-	OVERMOLD	TPU	BLACK
12	1	LABEL 2.0X1.75	VINYL	YELLOW

DOCUMENT STATUS | P1 | RELEASE DATE | 2024/03/21 10:35:15

SCALE 1:2

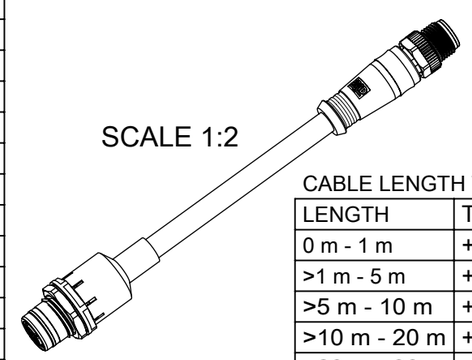

CABLE LENGTH TOLERANCES

LENGTH	TOLERANCE
0 m - 1 m	+40 mm
>1 m - 5 m	+60 mm
>5 m - 10 m	+80 mm
>10 m - 20 m	+140 mm
>20 m - 30 m	+160 mm
>30 m	+1% length

FUNCTIONAL SYMBOLS: EA = 0, EC = 2, EP = 0
DIVISIONAL SYMBOLS

THIS DRAWING CONTAINS INFORMATION THAT IS PROPRIETARY TO MOLEX ELECTRONIC TECHNOLOGIES, LLC AND SHOULD NOT BE USED WITHOUT WRITTEN PERMISSION

DIMENSION UNITS: mm | SCALE: 2:1
GENERAL TOLERANCES (UNLESS SPECIFIED)
ANGULAR TOL ± 1.0°
4 PLACES ±
3 PLACES ±
2 PLACES ± 0.05
1 PLACE ± 0.3
0 PLACES ± 0.5
DRAFT WHERE APPLICABLE MUST REMAIN WITHIN DIMENSIONS

CURRENT REV DESC: CABLE COLOR UPDATED
EC NO: 780754
DRWN: RSCHIEBER 2024/03/20
CHK'D: RSILLER 2024/03/21
APPR: RSILLER 2024/03/21
INITIAL REVISION:
DRWN: RSCHIEBER 2019/05/14
APPR: RSILLER 2021/03/16

molex

REC M12 CAT6A 8P AC STR TPE MA XM SHLD

PRODUCT CUSTOMER DRAWING

DOCUMENT NUMBER	DOC TYPE	DOC PART	REVISION
1203410885	PSD	000	A6

THIRD ANGLE PROJECTION | DRAWING: A3-SIZE | SERIES: 120341 | MATERIAL NUMBER: SEE TABLE 1 | CUSTOMER: GENERAL MARKET | SHEET NUMBER: 1 OF 1

FORMAT: master-Sheet-A3
REVISION: J
DATE: 2020/01/14