MALE PLUG M8 STRAIGHT SINGLE ENDED

CONTACT POSITION FRONT VIEW:

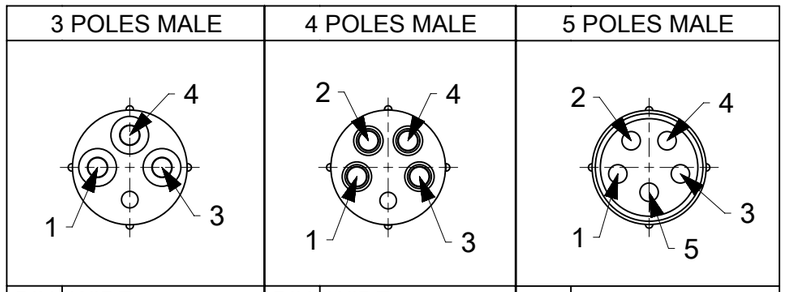

PIN	WIRE	PIN	WIRE	PIN	WIRE
1	BROWN	1	BROWN	1	BROWN
2	-	2	WHITE	2	WHITE
3	BLUE	3	BLUE	3	BLUE
4	BLACK	4	BLACK	4	BLACK
5	-	5	-	5	GREY

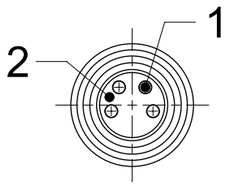

VIEW FROM THE FRONT SIDE

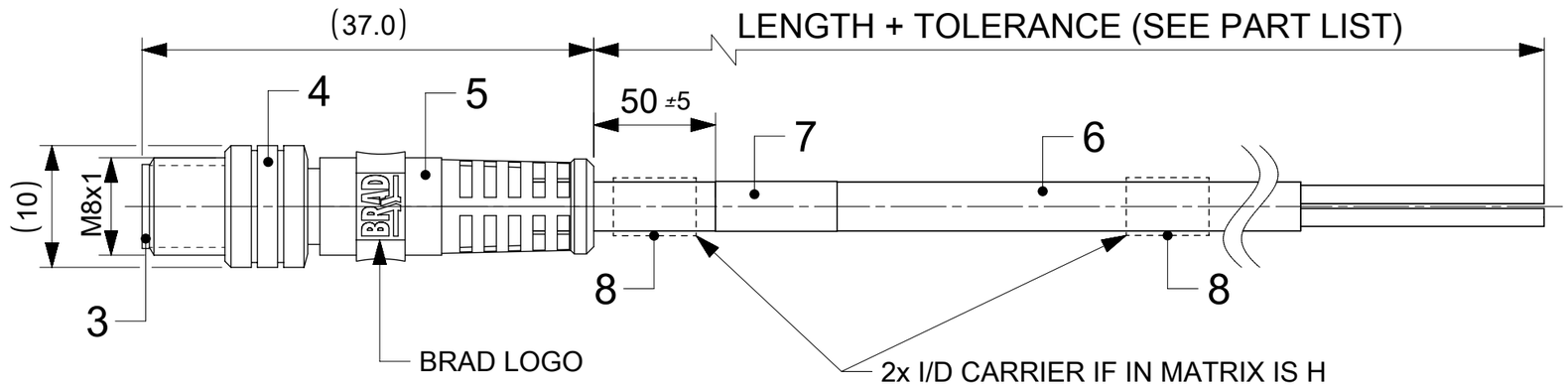

TECHNICAL SPECIFICATION:

CONTACT CURRENT RATING: 3-5 POLES 3 A
VOLTAGE RATING: 3 POLES 60 V
4-5 POLES 30 V
PROTECTION CLASS: IP 67
TEMPERATURE RANGE: -25° C / +80° C
PACKAGING ACCORDING TO PACKAGING SPEC. 1201202000

BILL OF MATERIALS

ITEM	QTY.	DESCRIPTION	MATERIAL	FINISH / COLOR
8	0 / 2	ID CARRIER (SEE MATRIX)	PVC	TRANSPARENT
7	1	LABEL OR PRINTING	VINYL / ---	---
6	-	CABLE	SEE MATRIX	---
5	-	OVERMOULDING	TPU	BLACK
4	1	COUPLING NUT M8 MALE	BRASS	NICKEL
3	1	SLEEVE	BRASS	NICKEL
2	1	INSERT MALE	TPU	BLACK
1	3 / 4 / 5	CONTACT M8 MALE	BRASS	SELECTIVE Au OVER Ni

DOCUMENT STATUS | P1 | RELEASE DATE | 2024/11/11 13:43:58

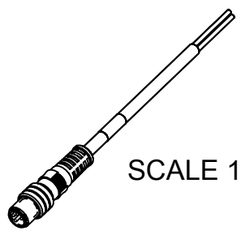

SCALE 1:2

THIS DRAWING CONTAINS INFORMATION THAT IS PROPRIETARY TO MOLEX ELECTRONIC TECHNOLOGIES, LLC AND SHOULD NOT BE USED WITHOUT WRITTEN PERMISSION

FUNCTIONAL SYMBOLS: F/A = 0, F/C = 0, F/P = 0
DIVISIONAL SYMBOLS

DIMENSION UNITS: mm
SCALE: 2:1

GENERAL TOLERANCES (UNLESS SPECIFIED)

ANGULAR TOL	±	1.0 °
4 PLACES	±	
3 PLACES	±	
2 PLACES	±	0.05
1 PLACE	±	0.3
0 PLACES	±	0.5

DRAFT WHERE APPLICABLE MUST REMAIN WITHIN DIMENSIONS

CURRENT REV DESC: SORTED/REVISED PART LIST BY CABLE TYPE, LENGTH

EC NO: 803942
DRWN: RSCHIEBER 2024/11/06
CHK'D: RSILLER 2024/11/11
APPR: RSILLER 2024/11/11

INITIAL REVISION:
DRWN: RSCHIEBER 2021/11/23
APPR: RSILLER 2021/11/25

THIRD ANGLE PROJECTION | DRAWING: A3-SIZE | SERIES: 120086

molex

CSE M8 XP AC MA STR XM SE UNSH AU

PRODUCT CUSTOMER DRAWING

DOCUMENT NUMBER	DOC TYPE	DOC PART	REVISION
1200860183	PSD	000	A2

MATERIAL NUMBER	CUSTOMER	SHEET NUMBER
SEE PART LIST	GENERAL MARKET	1 OF 3

FORMAT: master Sheet A3
REVISION: J
DATE: 2020/01/14

ENGINEERING NO. - NUMERICAL CODE (Available parts see PART LIST table. Others on request)

4	0	X	0	0	6	X	X	X	M	X	X	X	*	*
													OPTIONS	

40 = M8x1 SINGLE ENDED

POLES:
3 = 3 POLE
4 = 4 POLE
5 = 5 POLE

HEADER
006 = MALE STRAIGHT

CABLE TYPE
SEE CABLE SPECIFICATION

UNIT
M = METER

LENGTH EXAMPLE
010 = 1 m
050 = 5 m
100 = 10 m

OPTIONS

Overmold color:

Blank (Standard)=Black
A = Grey / G=Black / Y=Yellow
For cables K03, K05, A09, S19, S20 & S26 = Yellow

Coupling Nut:

Blank (Standard)=Knurled Brass Ni Plated
1 = Stainless steel
2 = Nylon
3 = Nickel Plated Brass
4 = Valox (polyester)
5 = Delrin
6 = clear anodized alum
7 = Teflon coat
Blank = 7 for cables: I20, I26, K03, K05, P82, S20 i S26
8 = Type 316 stainless steel
9 = Knurled / Hexagonal SW9 Brass Ni Plated
H= 2 pcs. of I/D Carrier PVC Transparent
(Cables Ixx & P82 always with 2 pcs. of I/D Carrier even if no H in Engineering No.)

CABLE SPECIFICATION

CABLE TYPE	NO. OF WIRES	CROSS SECTION	CABLE JACKET	UL	CSA	TEMP. RATING	STATIC: TEMP. / BENDING RADIUS	DYNAMIC: TEMP. / BENDING RADIUS	DRAG CHAIN	SHIELD
A10	4	0.25mm²	PVC YELLOW	UL 2661/1731	I/II A/B 105°C/300V	105°C	-	-	-	NO
E02	3 / 4 / 5	0.25mm²	PVC BLACK	UL 2464/1729	C22.2 I/II A/B 80°C/300V	-	-30°C to +80°C, 10xO.D.	-10°C to +80°C, 15xO.D.	-	NO
H08	3 / 4 / 5	0.25mm²	PUR BLACK LS0H	UL 21198/10493	C22.2 I/II A/B 80°C/300V	-	-40°C to +80°C, 5xO.D.	-25°C to +80°C, 10xO.D.	2 000 000 cycles, Temp max 60°C	NO
I12	3	0.50mm²	PVC GREY	-	-	-	-25°C to +70°C, 10xO.D.	-5°C to +70°C, 15xO.D.		NO
I02	3 / 4	0.25mm²	PVC (CEI) GREY	-	-	-	-30°C to +70°C	-5°C to +70°C	-	NO
P02	3 / 4 / 5	0.25mm²	PUR / PVC BLACK	-	-	-	-30°C to +80°C, 7xO.D.	-5°C to +80°C, 15xO.D.	-	NO
I70	3	0.50mm²	PVC GREY	-	-	-	-25°C to +70°C, 10xO.D.	-5°C to +70°C, 15xO.D.		NO

THIS DRAWING CONTAINS INFORMATION THAT IS PROPRIETARY TO MOLEX ELECTRONIC TECHNOLOGIES, LLC AND SHOULD NOT BE USED WITHOUT WRITTEN PERMISSION

FUNCTIONAL SYMBOLS: FA = 0, FC = 0, FD = 0
DIVISIONAL SYMBOLS

DIMENSION UNITS: mm
SCALE: 1:1

GENERAL TOLERANCES (UNLESS SPECIFIED)

ANGULAR TOL	±	1.0 °
4 PLACES	±	
3 PLACES	±	
2 PLACES	±	0.05
1 PLACE	±	0.3
0 PLACES	±	0.5

DRAFT WHERE APPLICABLE MUST REMAIN WITHIN DIMENSIONS

CURRENT REV DESC: SORTED/REVISED PART LIST BY CABLE TYPE, LENGTH

EC NO: 803942
DRWN: RSCHIEBER 2024/11/06
CHK'D: RSILLER 2024/11/11
APPR: RSILLER 2024/11/11

INITIAL REVISION:
DRWN: RSCHIEBER 2021/11/23
APPR: RSILLER 2021/11/25

THIRD ANGLE PROJECTION
DRAWING: A3-SIZE
SERIES: 120086

molex

CSE M8 XP AC MA STR XM SE UNSH AU

PRODUCT CUSTOMER DRAWING

DOCUMENT NUMBER	DOC TYPE	DOC PART	REVISION
1200860183	PSD	000	A2

MATERIAL NUMBER	CUSTOMER	SHEET NUMBER
SEE PART LIST	GENERAL MARKET	2 OF 3

DOCUMENT STATUS	P1	RELEASE DATE	2024/11/11 13:43:58

PART LIST

MOLEX PN	ENGINEERING NO.	L [mm]+TOL.
4P CABLE A10		
1200860183	404006A10M020	2000+60
3P CABLE E02		
1200868302	403006E02M002	200+40
1200270459	403006E02M003	300+40
1200868056	403006E02M006	600+40
1200270364	403006E02M010	1000+40
1200868681	403006E02M010H	1000+40
1200868303	403006E02M015	1500+60
1200868228	403006E02M020	2000+60
1200868471	403006E02M020Y	2000+60
1200868695	403006E02M020H	2000+60
1200868305	403006E02M030	3000+60
1200271420	403006E02M035	3500+60
1200868682	403006E02M035H	3500+60
1200271421	403006E02M040	4000+60
1200868683	403006E02M040H	4000+60
1200868684	403006E02M045H	4500+60
1200270105	403006E02M050	5000+60
1200271422	403006E02M060	6000+80
1200868307	403006E02M100	10000+80
1200868720	403006E02M100H	10000+80
1200868387	403006E02M150	15000+140
1200868472	403006E02M150Y	15000+140
1200868304	403006E02M025	25000+60
1200868306	403006E02M045	45000+60
4P CABLE E02		
1200868366	404006E02C550	550+40
1200868161	404006E02M010	1000+40
1200868367	404006E02M015	1500+60
1200868368	404006E02M020	2000+60
1200270376	404006E02M050	5000+60
1200868369	404006E02M100	10000+80
5P CABLE E02		
1200868152	405006E02M010	1000+40
1200868173	405006E02M020	2000+40
1200868573	405006E02M030	3000+60
1200868174	405006E02M050	5000+60
1200868175	405006E02M100	10000+80
1200868164	405006E02M300	30000+160
1200868165	405006E02M500	50000+500
1200868166	405006E02M600	60000+600

MOLEX PN	ENGINEERING NO.	L [mm]
3P CABLE H08		
1200868496	403006H08M010	1000+40
1200868390	403006H08M020	2000+60
1200868078	403006H08M050	5000+60
1200868433	403006H08M100	10000+80
4P CABLE H08		
1200868408	404006H08M003	300+40
1200868900	404006H08M005	500+40
1200868409	404006H08M010	1000+40
1200868392	404006H08M020	2000+60
1200868227	404006H08M050	5000+60
1200868488	404006H08M100	10000+80
5P CABLE H08		
1200868853	405006H08M010	1000+40
1200868397	405006H08M020	2000+60
1200868854	405006H08M050	5000+60
1200868855	405006H08M100	10000+80
3P CABLE I12		
1200868047	403006I12C550	550+40
1200270659	403006I12M006	600+40
1200270547	403006I12M010	1000+40
1200868425	403006I12M050	5000+60
1200868426	403006I12M100	10000+80
1200868421	403006I12M150	15000+140
3P CABLE I02		
1200868310	403006I02M003	300+40
1200868308	403006I02C350	350+40
1200868311	403006I02M004	400+40
1200868309	403006I02C450	450+40
1200868312	403006I02M006	600+40
1200868313	403006I02M007	700+40
1200868314	403006I02M010	1000+40
1200868315	403006I02M011	1100+60
1200868316	403006I02M014	1400+60
1200868317	403006I02M015	1500+60
1200868318	403006I02M020	2000+60
1200868319	403006I02M030	3000+60
1200868320	403006I02M050	5000+60
1200868321	403006I02M100	10000+80
1200868322	403006I02M150	15000+140
4P CABLE I02		
1200868370	404006I02M003	300+40

MOLEX PN	ENGINEERING NO.	L [mm]+TOL.
3P CABLE P02		
1200271332	403006P02M003	300+40
1200271179	403006P02M004	400+40
1200271327	403006P02M005	500+40
1200271200	403006P02M006	600+40
1200271079	403006P02M010	1000+40
1200270911	403006P02M020	2000+60
1200868514	403006P02M030	3000+60
1200270453	403006P02M040	4000+60
1200860474	403006P02M050	5000+60
1200868515	403006P02M075	7500+80
1200270933	403006P02M100	10000+80
4P CABLE P02		
1200868562	404006P02M002	200+40
1200868371	404006P02M004G	400+40
1200868372	404006P02M010	1000+40
1200868373	404006P02M020	2000+40
1200868374	404006P02M030G	3000+40
1200868375	404006P02M050	5000+60
1200868376	404006P02M050G	5000+60
1200868377	404006P02M100	10000+80
5P CABLE P02		
1200868755	405006P02C180	180+40
1200270588	405006P02M005	500+40
1200270877	405006P02C550	550+40
1200868512	405006P02C550Y	550+40
1200868087	405006P02M010	1000+40
1200868182	405006P02M012	1200+60
1200270752	405006P02M020	2000+60
1200868680	405006P02M020Y	2000+60
1200868031	405006P02M030	3000+60
1200860586	405006P02M040	4000+60
1200270657	405006P02M050	5000+60
1200860588	405006P02M100	10000+80
3P CABLE I70		
1200868437	403006I70M050	5000+60
1200868438	403006I70M100	10000+80
1200868436	403006I70M150	15000+140

DOCUMENT STATUS	P1	RELEASE DATE	2024/11/11 13:43:58

FORMAT: master-8-mod-A3
REVISION: J1
DATE: 2021/05/07

FUNCTIONAL SYMBOLS
= 0
= 0
= 0

DIVISIONAL SYMBOLS

THIS DRAWING CONTAINS INFORMATION THAT IS PROPRIETARY TO MOLEX ELECTRONIC TECHNOLOGIES, LLC AND SHOULD NOT BE USED WITHOUT WRITTEN PERMISSION

DIMENSION UNITS	SCALE
mm	1:1

GENERAL TOLERANCES (UNLESS SPECIFIED)

ANGULAR TOL	±	1.0 °
4 PLACES	±	
3 PLACES	±	
2 PLACES	±	0.05
1 PLACE	±	0.3
0 PLACES	±	0.5

DRAFT WHERE APPLICABLE MUST REMAIN WITHIN DIMENSIONS

CURRENT REV DESC: SORTED/REVISED PART LIST BY CABLE TYPE, LENGTH

EC NO: 803942
DRWN: RSCHIEBER 2024/11/06
CHK'D: RSILLER 2024/11/11
APPR: RSILLER 2024/11/11

INITIAL REVISION:
DRWN: RSCHIEBER 2021/11/23
APPR: RSILLER 2021/11/25

THIRD ANGLE PROJECTION

DRAWING	SERIES
A3-SIZE	120086

molex

CSE M8 XP AC MA STR XM SE UNSH AU

PRODUCT CUSTOMER DRAWING

DOCUMENT NUMBER	DOC TYPE	DOC PART	REVISION
1200860183	PSD	000	A2

MATERIAL NUMBER	CUSTOMER	SHEET NUMBER
SEE PART LIST	GENERAL MARKET	3 OF 3