FEMALE PLUG M8 90° ANGLED TO MALE PLUG M8 STRAIGHT

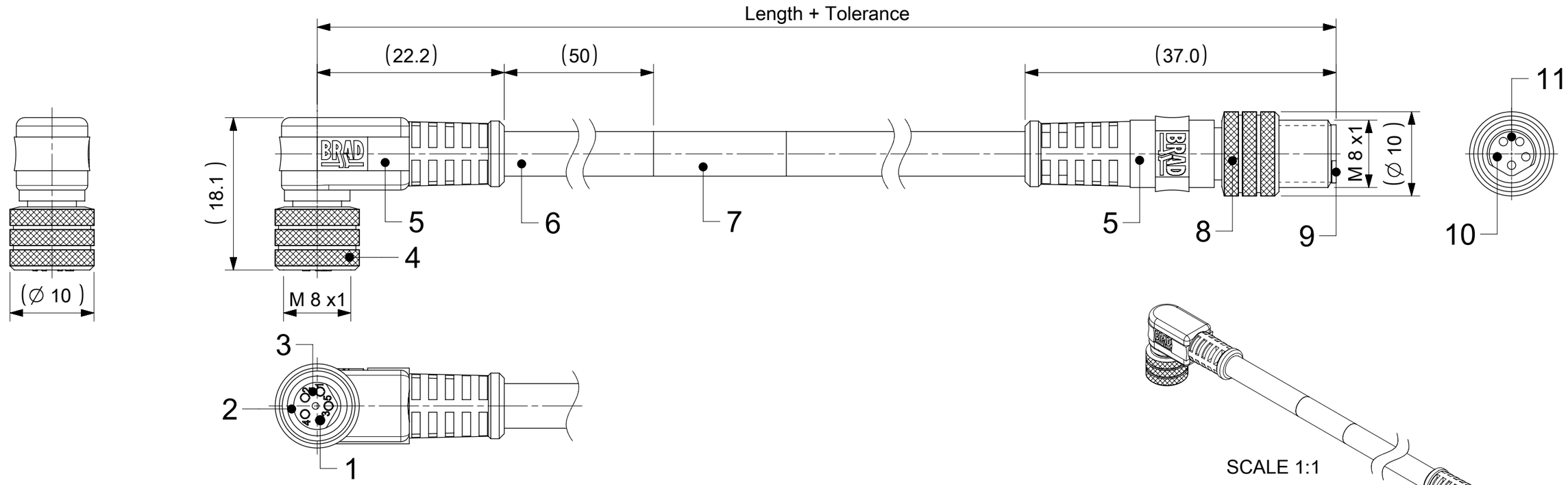

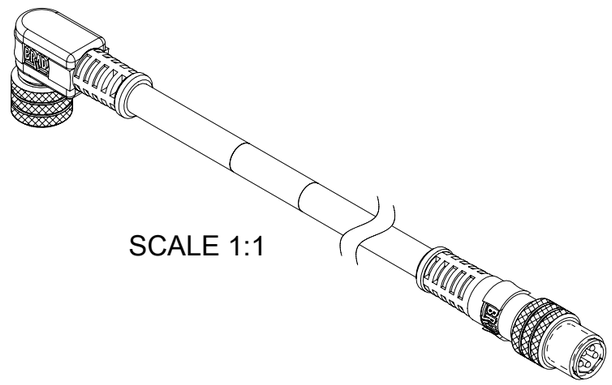

SCALE 1:1

CONTACTS POSITION FRONT VIEW:

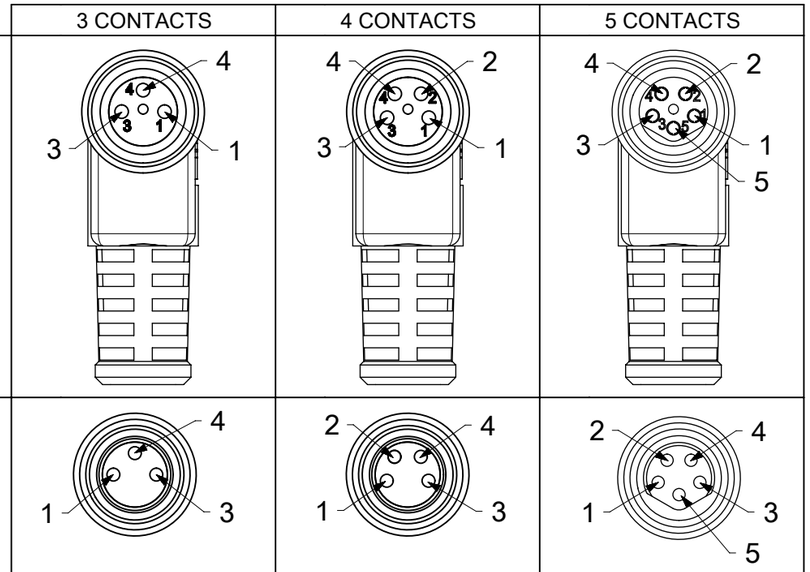

CONNECTIONS						
	PIN	WIRE	PIN	WIRE	PIN	WIRE
	1	BROWN	1	BROWN	1	BROWN
	3	BLUE	2	WHITE	2	WHITE
	4	BLACK	3	BLUE	3	BLUE
			4	BLACK	4	BLACK
					5	GREY

CODING ACCORDING TO IEC 61076-2-104

NOTES:

RATED VOLTAGE: 3 contacts 60V AC/DC
4 and 5 contacts 30V AC/DC
CURRENT RATING: 3, 4, 5 contacts 3A
PROTECTION CLASS: IP 67
TEMPERATURE: -25°C / +80°C
PACKAGING ACCORDING TO PACKAGING SPEC. 1201202000

FOR OPTIONS SEE - NUMERICAL CODE - ON SHEET 2

ITEM	QTY.	DESCRIPTION	MATERIAL	FINISH
11	1	INSERT MALE BLACK	TPU	---
10	3 / 4 / 5	CONTACT M8 MALE	BRASS	SELECTIVE Au OVER Ni
9	1	SLEEVE	BRASS	NICKEL
8	1	COUPLING NUT M8 MALE	BRASS	NICKEL
7	1	LABEL YELLOW	VINYL	---
	-	PRINTING FOR CABLES Ixx	---	---
6	-	CABLE	SEE SHEET 2	---
5	-	OVERMOULDING BLACK	TPU	---
4	1	COUPLING NUT M8 FEMALE	BRASS	NICKEL
3	1	INSERT FEMALE BLACK	TPU	---
2	1	O-RING RED	FKM	---
1	3 / 4 / 5	CONTACT M8 FEMALE	BRASS	SELECTIVE Au OVER Ni

THIS DRAWING CONTAINS INFORMATION THAT IS PROPRIETARY TO MOLEX ELECTRONIC TECHNOLOGIES, LLC AND SHOULD NOT BE USED WITHOUT WRITTEN PERMISSION

FUNCTIONAL SYMBOLS: FA = 0, FC = 0, FE = 0
DIVISIONAL SYMBOLS

DIMENSION UNITS: mm
SCALE: 2:1

GENERAL TOLERANCES (UNLESS SPECIFIED)

ANGULAR TOL	±	1.0 °
4 PLACES	±	
3 PLACES	±	
2 PLACES	±	0.05
1 PLACE	±	0.3
0 PLACES	±	0.5

DRAFT WHERE APPLICABLE MUST REMAIN WITHIN DIMENSIONS

CURRENT REV DESC: PACKAGING SPEC ADDED

EC NO: 770174
DRWN: RSCHIEBER 2023/11/17
CHK'D: RSILLER 2023/11/30
APPR: RSILLER 2023/11/30

INITIAL REVISION:
DRWN: JMARSZALEK 2016/10/20
APPR: RSILLER 2017/01/11

THIRD ANGLE PROJECTION | DRAWING: A3-SIZE | SERIES: 120087

molex

CSE M8 M8 XP AC BC FE RA MA STR XM

PRODUCT CUSTOMER DRAWING

DOCUMENT NUMBER	DOC TYPE	DOC PART	REVISION
1200878243	PSD	000	A5

MATERIAL NUMBER	CUSTOMER	SHEET NUMBER
SEE PART LIST	GENERAL MARKET	1 OF 3

DOCUMENT STATUS	P1	RELEASE DATE	2023/11/30 13:31:04

FORMAT: master-ib-prod-A3
REVISION: J1
DATE: 2021/05/01

ENGINEERING NO. - NUMERICAL CODE (Available parts see PART LIST table. Other parts available upon request).

OPTIONS

4	4	X	0	3	1	X	X	X	X	X	X	X	X

- 44=Nano-Change M8x1 Double ended
- Contacts: 3=3 Contacts, 4=4 Contacts, 5=5 Contacts
- Heads style: 031=Plug Female 90° to Plug Male Straight
- Cable type: See Table
- Units: M=Meter
- Length Examples: 005=0.5 unit, 010=1 unit, 100=10 unit
- Overmold color: Blank (Standard)=Black, A=Grey / G=Black / Y=Yellow
- Coupling Nut: Blank (Standard)=Knurled Brass Ni Plated, 9=Knurled / Hexagonal SW9 Brass Ni Plated
- H= 2 pcs. of I/D Carrier PVC Transparent (Cables Ixx & P82 always with 2 pcs. of I/D Carrier)

COUPLING NUT

FEMALE MALE

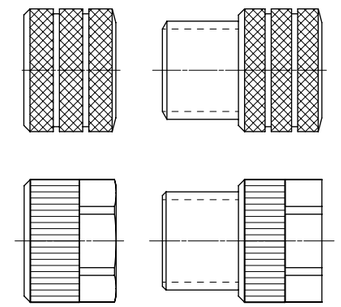

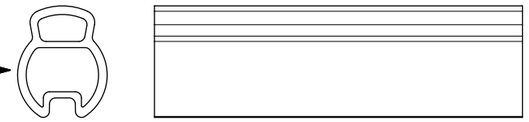

CABLE INFORMATION (for more information see Cable Data Sheet).

CABLE TYPE	NO. OF WIRES	CROSS SECTION	CABLE JACKET	UL	CSA	STATIC: TEMP. / BENDING RADIUS	DYNAMIC: TEMP. / BENDING RADIUS	DRAG CHAIN	SHIELD
E02	3 / 4 / 5	0.25mm²	PVC BLACK	UL 2464/1729	C22.2 I/II A/B 80°C/300V	-30°C to +80°C, >10xO.D.	-10°C to +80°C, >15xO.D.	-	-
H08	3 / 4 / 5	0.25mm²	PUR BLACK LS0H	UL 21198/10493	C22.2 I/II A/B 80°C/300V	-40°C to +80°C, >5xO.D.	-25°C to +80°C, >10xO.D.	2 000 000 cycles at 20°C, Temp. range +5°C to +60°C	-
I02	3 / 4	0.25mm²	PVC CEI GREY	-	-	-30°C to +70°C	-5°C to +70°C	-	-
P02	3 / 4 / 5	0.25mm²	PUR / PVC BLACK	-	-	-30°C to +80°C, >7xO.D.	-5°C to +80°C, >15xO.D.	-	-
P82	3	0.34mm²	PUR IRR ORANGE	-	-	-50°C to +105°C, >5xO.D.	-40°C to +105°C, >7.5xO.D.	-	-

CABLE LENGTH TOLERANCES

OVER	UP TO AND INCLUDING	TOLERANCES
0	305mm	+19mm
305mm	915mm	+45mm
915mm	1830mm	+56mm
1830mm	3660mm	+89mm
3660mm	7320mm	+165mm
7320mm	14640mm	+317mm
14640mm	30500mm	+610mm
30500mm	>	+2% of finished length

THIS DRAWING CONTAINS INFORMATION THAT IS PROPRIETARY TO MOLEX ELECTRONIC TECHNOLOGIES, LLC AND SHOULD NOT BE USED WITHOUT WRITTEN PERMISSION

FUNCTIONAL SYMBOLS: = 0 / = 0 / = 0

DIVISIONAL SYMBOLS

DIMENSION UNITS	SCALE
mm	2:1

GENERAL TOLERANCES (UNLESS SPECIFIED)

ANGULAR TOL	±	1.0 °
4 PLACES	±	
3 PLACES	±	
2 PLACES	±	0.05
1 PLACE	±	0.3
0 PLACES	±	0.5

DRAFT WHERE APPLICABLE MUST REMAIN WITHIN DIMENSIONS

CURRENT REV DESC: PACKAGING SPEC ADDED

EC NO: 770174
DRWN: RSCHIEBER 2023/11/17
CHK'D: RSILLER 2023/11/30
APPR: RSILLER 2023/11/30

INITIAL REVISION:
DRWN: JMARSZALEK 2016/10/20
APPR: RSILLER 2017/01/11

THIRD ANGLE PROJECTION | DRAWING: A3-SIZE | SERIES: 120087

molex

CSE M8 M8 XP AC BC FE RA MA STR XM

PRODUCT CUSTOMER DRAWING

DOCUMENT NUMBER	DOC TYPE	DOC PART	REVISION
1200878243	PSD	000	A5

MATERIAL NUMBER	CUSTOMER	SHEET NUMBER
SEE PART LIST	GENERAL MARKET	2 OF 3

DOCUMENT STATUS	P1	RELEASE DATE	2023/11/30 13:31:04

FORMAT: master-tb-prod-A3
REVISION: J1
DATE: 2021/05/01

PART LIST

No.	Molex PN	Engineering No.	Cable Length
1	1200280016	443031E02M010	1m
2	1200281220	443031P82M003	0.3m
3	1200281221	443031P82M006	0.6m
4	1200281283	443031E02M005	0.5m
5	1200875016	443031E02M006	0.6m
6	1200878128	443031H08M020	2m
7	1200878129	443031H08M030	3m
8	1200878130	443031H08M050	5m
9	1200878196	444031H08M010	1m
10	1200878197	444031P02M020	2m
11	1200878242	445031E02M006	0.6m
12	1200878243	445031E02M030	3m
13	1200878244	445031E02M050	5m
14	1200878254	444031P02M050	5m
15	1200878303	443031E02M003	0.3m
16	1200878304	443031E02M015	1.5m
17	1200878305	443031E02M020	2m
18	1200878306	443031E02M030	3m
19	1200878307	443031E02M035	3.5m
20	1200878308	443031E02M050	5m
21	1200878309	443031I02M006	0.6m
22	1200878310	443031I02M010	1m
23	1200878311	443031I02M015	1.5m
24	1200878312	443031I02M020	2m
25	1200878313	443031I02M030	3m
26	1200878314	443031P02M003	0.3m
27	1200878315	443031P02M006	0.6m
28	1200878316	443031P02M010	1m
29	1200878317	443031P02M020	2m
30	1200878318	443031P02M030	3m
31	1200878319	443031P02M050	5m
32	1200878363	444031E02M003	0.3m
33	1200878364	444031E02M006	0.6m
34	1200878365	444031E02M010	1m
35	1200878366	444031E02M020	2m

No.	Molex PN	Engineering No.	Cable Length
36	1200878367	444031E02M030	3m
37	1200878368	444031E02M050	5m
38	1200878369	444031E02M100	10m
39	1200878370	444031P02M003	0.3m
40	1200878371	444031P02M006	0.6m
41	1200878372	444031P02M010	1m
42	1200878373	444031P02M030	3m
43	1200878499	443031H08M010	1m
44	1200878542	443031E02M015Y	1.5m
45	1200878554	444031H08M006	0.6m
46	1200878555	444031H08M020	2m
47	1200878556	444031H08M050	5m
48	1200878557	443031H08M006	0.6m
49	1200878595	443031P02M010H	1m
50	1200878625	443031P82M050	5m
51	1200878637	443031E02M002	0.2m
52	1200878638	443031E02M025	2.5m
53	1200878639	443031E02M065	6.5m
54	1200878659	443031E02M010H	1m
55	1200878660	443031E02M005H	0.5m
56	1200878664	443031E02M020H	2m
57	1200878667	444031E02M003H	0.3m
58	1200878672	443031E02M002H	0.2m
59	1200878673	443031E02M025H	2.5m
60	1200878674	443031E02M065H	6.5m
61	1200878690	443031E02M015H	1.5m
62	1200878942	445031H08M006	0.6m
63	1200878943	445031H08M010	1m
64	1200878944	445031H08M020	2m
65	1200878945	445031H08M050	5m
66	1200878948	445031E02M010	1m
67	1200878949	445031E02M020	2m
68	1200280400	444031P02M020	2m
69	1200878979	444031H08M030	3m
70	1200878981	445031H08M030	3m

No.	Molex PN	Engineering No.	Cable Length
71			
72			
73			
74			
75			
76			
77			
78			
79			
80			
81			
82			
83			
84			
85			
86			
87			
88			
89			
90			
91			
92			
93			
94			
95			
96			
97			
98			
99			
100			
101			
102			
103			
104			
105			

No.	Molex PN	Engineering No.	Cable Length
106			
107			
108			
109			
110			
111			
112			
113			
114			
115			
116			
117			
118			
119			
120			
121			
122			
123			
124			
125			
126			
127			
128			
129			
130			
131			
132			
133			
134			
135			
136			
137			
138			
139			
140			

THIS DRAWING CONTAINS INFORMATION THAT IS PROPRIETARY TO MOLEX ELECTRONIC TECHNOLOGIES, LLC AND SHOULD NOT BE USED WITHOUT WRITTEN PERMISSION

FUNCTIONAL SYMBOLS: A = 0, C = 0, D = 0

DIVISIONAL SYMBOLS

DIMENSION UNITS	SCALE
mm	1:1

GENERAL TOLERANCES (UNLESS SPECIFIED)

ANGULAR TOL	±	1.0 °
4 PLACES	±	
3 PLACES	±	
2 PLACES	±	0.05
1 PLACE	±	0.3
0 PLACES	±	0.5

DRAFT WHERE APPLICABLE MUST REMAIN WITHIN DIMENSIONS

CURRENT REV DESC: PACKAGING SPEC ADDED

EC NO: 770174
DRWN: RSCHIEBER 2023/11/17
CHK'D: RSILLER 2023/11/30
APPR: RSILLER 2023/11/30

INITIAL REVISION:
DRWN: JMARSZALEK 2016/10/20
APPR: RSILLER 2017/01/11

THIRD ANGLE PROJECTION | DRAWING: A3-SIZE | SERIES: 120087

molex

CSE M8 M8 XP AC BC FE RA MA STR XM

PRODUCT CUSTOMER DRAWING

DOCUMENT NUMBER	DOC TYPE	DOC PART	REVISION
1200878243	PSD	000	A5

MATERIAL NUMBER	CUSTOMER	SHEET NUMBER
SEE PART LIST	GENERAL MARKET	3 OF 3

DOCUMENT STATUS	P1	RELEASE DATE	2023/11/30 13:31:04

FORMAT: master-tb-prod-A3
REVISION: J1
DATE: 2021/05/01