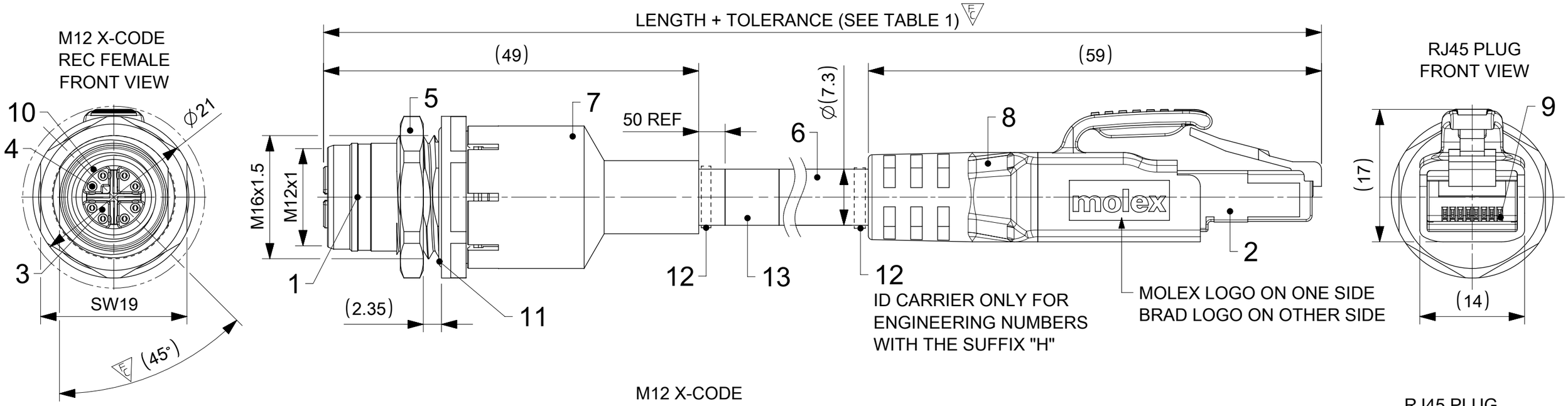

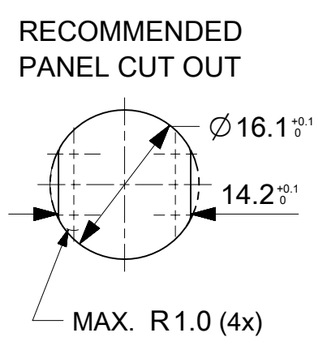

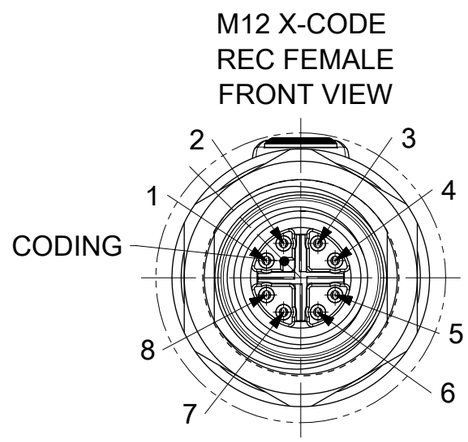

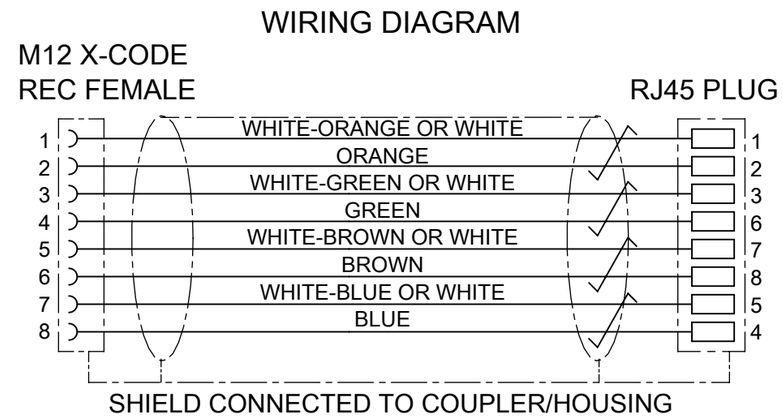

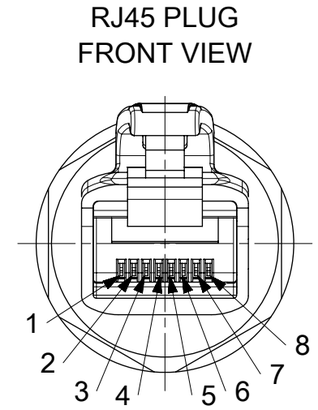

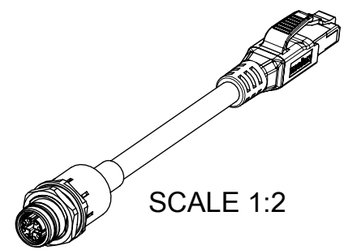

BILL OF MATERIAL

ITEM	QTY	DESCRIPTION	MATERIAL	FINISH/COLOR
1	1	SHELL M12 XC FE	BRASS	Ni PLATED
2	1	PLUG RJ45	-	-
3	1	INSERT M12 XC FE	PA	BLACK
4	8	CONTACT M12 XC FE	BRASS	Au PLATED
5	1	LOCKNUT	BRASS	Ni PLATED
6	1	CABLE 4X(2X AWG26/7) CAT 7	TPE	GREEN TEAL SIMILAR RAL6026
7	1	SHIELD SLEEVE	BRASS	Ni PLATED
8	1	OVERMOULD	TPU	BLACK
9	8	CONTACT RJ45	PHOSPHOR BRONZE	SELECTIVE GOLD
10	1	O-RING	FPM	RED
11	1	O-RING SHELL	EPDM	BLACK
12	-	ID CARRIER	PVC	TRANSPARENT
13	1	LABEL 2.0X1.75	VINYL	YELLOW

DOCUMENT STATUS | P1 | RELEASE DATE | 2024/03/21 10:35:16

THIS DRAWING CONTAINS INFORMATION THAT IS PROPRIETARY TO MOLEX ELECTRONIC TECHNOLOGIES, LLC AND SHOULD NOT BE USED WITHOUT WRITTEN PERMISSION

FUNCTIONAL SYMBOLS: A = 0, C = 2, P = 0
DIVISIONAL SYMBOLS

DIMENSION UNITS: mm
SCALE: 2:1
GENERAL TOLERANCES (UNLESS SPECIFIED)

ANGULAR TOL	±	1.0 °
4 PLACES	±	
3 PLACES	±	
2 PLACES	±	0.05
1 PLACE	±	0.3
0 PLACES	±	0.5

DRAFT WHERE APPLICABLE MUST REMAIN WITHIN DIMENSIONS

CURRENT REV DESC: CABLE COLOR UPDATED

EC NO: 780754
DRWN: RSCHIEBER 2024/03/20
CHK'D: RSILLER 2024/03/21
APPR: RSILLER 2024/03/21

INITIAL REVISION:
DRWN: RSCHIEBER 2019/05/14
APPR: RSILLER 2020/12/09

THIRD ANGLE PROJECTION | DRAWING: A3-SIZE | SERIES: 120341

molex

REC M12 CAT6A RJ45 8P FE STR TPE XM

PRODUCT CUSTOMER DRAWING

DOCUMENT NUMBER	DOC TYPE	DOC PART	REVISION
1203410890	PSD	000	A8

MATERIAL NUMBER	CUSTOMER	SHEET NUMBER
SEE TABLE 1	GENERAL MARKET	1 OF 2

FORMAT: mxsize_tb_vert_A3
REVISION: J2
DATE: 2020/01/14

TABLE 1

MOLEX P/N	ENGINEERING NO.	DESCRIPTION	LENGTH (mm)
1203410890	ERWPEU7021M005	M12 CAT6A REC-F/RJ45 ST TPE GREEN TEAL SIMILAR RAL6026 0.5M	500
1203410891	ERWPEU7021M010	M12 CAT6A REC-F/RJ45 ST TPE GREEN TEAL SIMILAR RAL6026 1M	1000
1203410892	ERWPEU7021M020	M12 CAT6A REC-F/RJ45 ST TPE GREEN TEAL SIMILAR RAL6026 2M	2000
1203410958	ERWPEU7021M030	M12 CAT6A REC-F/RJ45 ST TPE GREEN TEAL SIMILAR RAL6026 3M	3000
1203410959	ERWPEU7021M040	M12 CAT6A REC-F/RJ45 ST TPE GREEN TEAL SIMILAR RAL6026 4M	4000
1203410893	ERWPEU7021M050	M12 CAT6A REC-F/RJ45 ST TPE GREEN TEAL SIMILAR RAL6026 5M	5000
1203410894	ERWPEU7021M100	M12 CAT6A REC-F/RJ45 ST TPE GREEN TEAL SIMILAR RAL6026 10M	10000
WITH ID CARRIER			
1203411009	ERWPEU7021M004H	M12 CAT6A REC-F/RJ45 ST TPE GREEN TEAL SIMILAR RAL6026 0.4M	400
1203411010	ERWPEU7021M005H	M12 CAT6A REC-F/RJ45 ST TPE GREEN TEAL SIMILAR RAL6026 0.5M	500
1203411011	ERWPEU7021M006H	M12 CAT6A REC-F/RJ45 ST TPE GREEN TEAL SIMILAR RAL6026 0.6M	600
1203411012	ERWPEU7021M010H	M12 CAT6A REC-F/RJ45 ST TPE GREEN TEAL SIMILAR RAL6026 1M	1000
1203411013	ERWPEU7021M020H	M12 CAT6A REC-F/RJ45 ST TPE GREEN TEAL SIMILAR RAL6026 2M	2000
1203411070	ERWPEU7021M030H	M12 CAT6A REC-F/RJ45 ST TPE GREEN TEAL SIMILAR RAL6026 3M	3000
1203411071	ERWPEU7021M040H	M12 CAT6A REC-F/RJ45 ST TPE GREEN TEAL SIMILAR RAL6026 4M	4000
1203411072	ERWPEU7021M050H	M12 CAT6A REC-F/RJ45 ST TPE GREEN TEAL SIMILAR RAL6026 5M	5000
1203411073	ERWPEU7021M060H	M12 CAT6A REC-F/RJ45 ST TPE GREEN TEAL SIMILAR RAL6026 6M	6000
1203411074	ERWPEU7021M070H	M12 CAT6A REC-F/RJ45 ST TPE GREEN TEAL SIMILAR RAL6026 7M	7000
1203411075	ERWPEU7021M080H	M12 CAT6A REC-F/RJ45 ST TPE GREEN TEAL SIMILAR RAL6026 8M	8000
1203411076	ERWPEU7021M100H	M12 CAT6A REC-F/RJ45 ST TPE GREEN TEAL SIMILAR RAL6026 10M	10000
1203411077	ERWPEU7021M120H	M12 CAT6A REC-F/RJ45 ST TPE GREEN TEAL SIMILAR RAL6026 12M	12000
1203411078	ERWPEU7021M150H	M12 CAT6A REC-F/RJ45 ST TPE GREEN TEAL SIMILAR RAL6026 15M	15000
1203411079	ERWPEU7021M200H	M12 CAT6A REC-F/RJ45 ST TPE GREEN TEAL SIMILAR RAL6026 20M	20000
1203411080	ERWPEU7021M250H	M12 CAT6A REC-F/RJ45 ST TPE GREEN TEAL SIMILAR RAL6026 25M	25000
1203411081	ERWPEU7021M300H	M12 CAT6A REC-F/RJ45 ST TPE GREEN TEAL SIMILAR RAL6026 30M	30000
1203411082	ERWPEU7021M350H	M12 CAT6A REC-F/RJ45 ST TPE GREEN TEAL SIMILAR RAL6026 35M	35000
1203411083	ERWPEU7021M400H	M12 CAT6A REC-F/RJ45 ST TPE GREEN TEAL SIMILAR RAL6026 40M	40000
1203411084	ERWPEU7021M450H	M12 CAT6A REC-F/RJ45 ST TPE GREEN TEAL SIMILAR RAL6026 45M	45000
1203411085	ERWPEU7021M500H	M12 CAT6A REC-F/RJ45 ST TPE GREEN TEAL SIMILAR RAL6026 50M	50000
1203411086	ERWPEU7021M550H	M12 CAT6A REC-F/RJ45 ST TPE GREEN TEAL SIMILAR RAL6026 55M	55000
1203411087	ERWPEU7021M600H	M12 CAT6A REC-F/RJ45 ST TPE GREEN TEAL SIMILAR RAL6026 60M	60000
1203411088	ERWPEU7021M650H	M12 CAT6A REC-F/RJ45 ST TPE GREEN TEAL SIMILAR RAL6026 65M	65000
1203411089	ERWPEU7021M700H	M12 CAT6A REC-F/RJ45 ST TPE GREEN TEAL SIMILAR RAL6026 70M	70000
1203411090	ERWPEU7021M750H	M12 CAT6A REC-F/RJ45 ST TPE GREEN TEAL SIMILAR RAL6026 75M	75000
1203411091	ERWPEU7021M800H	M12 CAT6A REC-F/RJ45 ST TPE GREEN TEAL SIMILAR RAL6026 80M	80000

NOTES:
VOLTAGE RATING: 30 V A.C. OR 42 V D.C.
CURRENT RATING: 0.5 A
TEMPERATURE RATING:
STATIC: -40 °C TO 80 °C
DYNAMIC: -25 °C TO 80 °C
IP RATING:
M12 SIDE IP 67 (IN MATED AND LOCKED CONDITION)
RJ45 SIDE IP 20
TRANSMISSION CHARACTERISTICS ACCORDING TO ISO/IEC 11801 CLASS E_A CHANNEL,
WITH INSERTION LOSS BEING IGNORED FOR CABLE LENGTHS ∠1 m OR ∟65 m
POWER TRANSMISSION TEST ACCORDING IEEE802.3bt UP TO 65m LENGTH
PACKAGING: CORDSETS ARE PACKED IN A POLYBAG

CABLE LENGTH TOLERANCES

LENGTH	TOLERANCE
0 m - 1 m	+40 mm
>1 m - 5 m	+60 mm
>5 m - 10 m	+80 mm
>10 m - 20 m	+140 mm
>20 m - 30 m	+160 mm
>30 m	+1% length

DOCUMENT STATUS	P1	RELEASE DATE	2024/03/21 10:35:16

FUNCTIONAL SYMBOLS: FA = 0, FC = 0, FD = 0
DIVISIONAL SYMBOLS

THIS DRAWING CONTAINS INFORMATION THAT IS PROPRIETARY TO MOLEX ELECTRONIC TECHNOLOGIES, LLC AND SHOULD NOT BE USED WITHOUT WRITTEN PERMISSION

DIMENSION UNITS	SCALE
mm	1:1

GENERAL TOLERANCES (UNLESS SPECIFIED)

ANGULAR TOL	±	1.0 °
4 PLACES	±	
3 PLACES	±	
2 PLACES	±	0.05
1 PLACE	±	0.3
0 PLACES	±	0.5

DRAFT WHERE APPLICABLE MUST REMAIN WITHIN DIMENSIONS

CURRENT REV DESC: CABLE COLOR UPDATED

EC NO: 780754
DRWN: RSCHIEBER 2024/03/20
CHK'D: RSILLER 2024/03/21
APPR: RSILLER 2024/03/21

INITIAL REVISION:
DRWN: RSCHIEBER 2019/05/14
APPR: RSILLER 2020/12/09

THIRD ANGLE PROJECTION | DRAWING: A3-SIZE | SERIES: 120341

molex

REC M12 CAT6A RJ45 8P FE STR TPE XM

PRODUCT CUSTOMER DRAWING

DOCUMENT NUMBER	DOC TYPE	DOC PART	REVISION
1203410890	PSD	000	A8

MATERIAL NUMBER	CUSTOMER	SHEET NUMBER
SEE TABLE 1	GENERAL MARKET	2 OF 2

FORMAT: master_Sized-A3
REVISION: J
DATE: 2020/01/14