PART No. MATRIX

E	2	2	E	0	6	0	2	1	M	X	X	X	X

- E: E=ETHERNET/ Ethernet
- 2: HEADS: 1 = M12 D-Coding
- E: WIRING TYPE: E=8 Pole (STRAIGHT WIRED)
- 0 6 0: HEADS STYLE: 060 = MALE STR / MALE STR
- 2 1: CABLE TYPE : CABLE 21
- M: UNITS: M= METER T=10x METER
- X X X: LENGTH EXAMPLES: 005=0.5 m 010=1 m 150=15 m T100=100 m
- X: H= 2 PCS. OF I/D Carrier

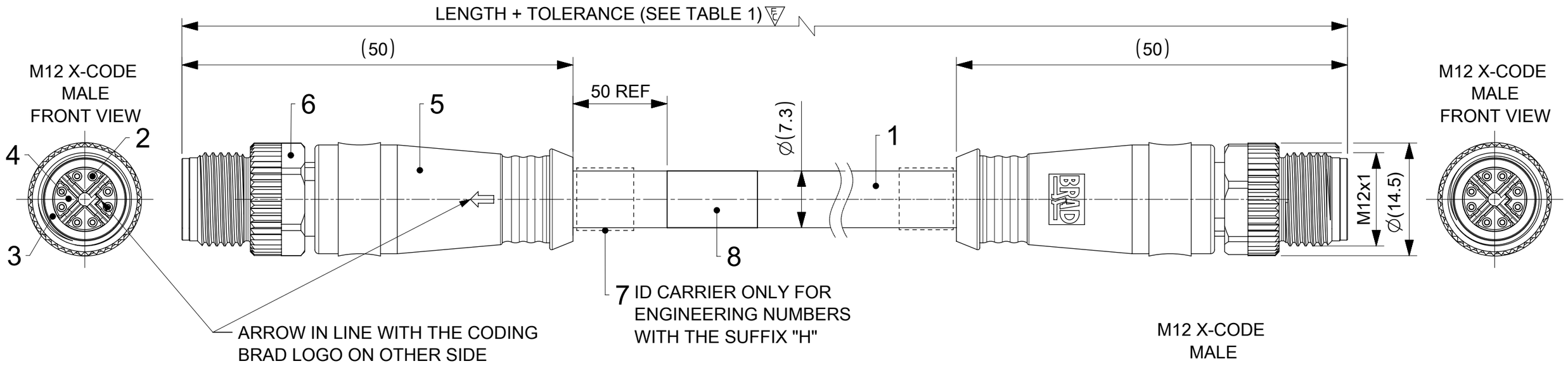

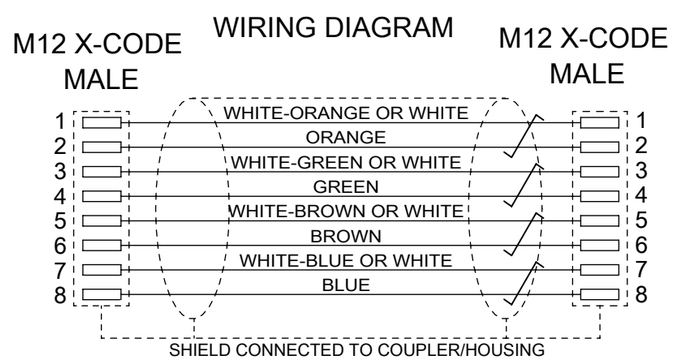

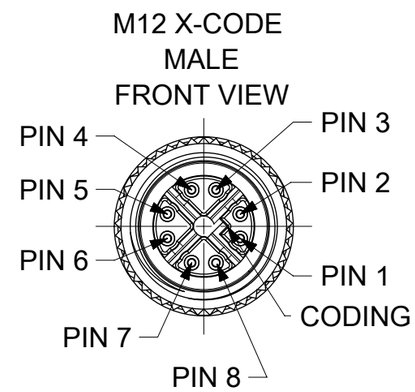

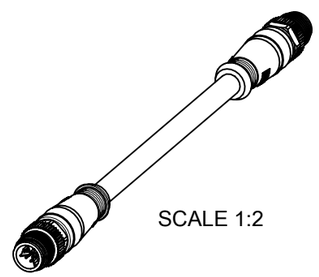

BILL OF MATERIAL

ITEM	QTY	DESCRIPTION	MATERIAL	FINISH/COLOR
1	1	CABLE 4X(2X AWG26/7) CAT 7	TPE	GREEN TEAL SIMILAR RAL6026
2	16	CONTACT M12 XC MALE	BRASS	Au PLATED
3	2	SHIELD SLEEVE	Zn	Ni PLATED
4	2	INSERT M12 XC MALE	PA	BLACK
5	-	MOULDING MATERIAL	TPU	BLACK
6	2	M12 HYBRID COUPLING NUT	BRASS	Ni PLATED
7	2	I/D CARRIER 6-10mmx30mm	PVC	TRANSPARENT
8	1	LABEL 2.0X1.75	VINYL	YELLOW

DOCUMENT STATUS	P1	RELEASE DATE	2024/03/21 10:35:13

THIS DRAWING CONTAINS INFORMATION THAT IS PROPRIETARY TO MOLEX ELECTRONIC TECHNOLOGIES, LLC AND SHOULD NOT BE USED WITHOUT WRITTEN PERMISSION

FUNCTIONAL SYMBOLS: FA = 0, FC = 1, FP = 0

DIVISIONAL SYMBOLS

DIMENSION UNITS: mm — SCALE: 2:1

GENERAL TOLERANCES (UNLESS SPECIFIED)

ANGULAR TOL	± 1.0 °
4 PLACES	±
3 PLACES	±
2 PLACES	± 0.05
1 PLACE	± 0.3
0 PLACES	± 0.5

DRAFT WHERE APPLICABLE MUST REMAIN WITHIN DIMENSIONS

CURRENT REV DESC: CABLE COLOR UPDATED

EC NO: 780754
DRWN: RSCHIEBER 2024/03/20
CHK'D: RSILLER 2024/03/21
APPR: RSILLER 2024/03/21

INITIAL REVISION:
DRWN: RSCHIEBER 2019/05/13
APPR: RSILLER 2020/12/09

THIRD ANGLE PROJECTION | DRAWING: A3-SIZE | SERIES: 120341

molex

CSE M12 CAT6A 8P XC MA STR TPE XM

PRODUCT CUSTOMER DRAWING

DOCUMENT NUMBER	DOC TYPE	DOC PART	REVISION
1203410863	PSD	000	A8

MATERIAL NUMBER	CUSTOMER	SHEET NUMBER
SEE TABLE 1	GENERAL MARKET	1 OF 2

FORMAT: master_Sized-A3
REVISION: J
DATE: 2020/01/14

TABLE 1

MOLEX P/N	ENGINEERING NO.	DESCRIPTION	LENGTH
1203410941	E22E06021M003	M12 CAT6A M/M ST/ST TPE GREEN TEAL SIMILAR RAL6026 0.3M	300
1203410863	E22E06021M005	M12 CAT6A M/M ST/ST TPE GREEN TEAL SIMILAR RAL6026 0.5M	500
1203410864	E22E06021M010	M12 CAT6A M/M ST/ST TPE GREEN TEAL SIMILAR RAL6026 1M	1000
1203410865	E22E06021M020	M12 CAT6A M/M ST/ST TPE GREEN TEAL SIMILAR RAL6026 2M	2000
1203410866	E22E06021M030	M12 CAT6A M/M ST/ST TPE GREEN TEAL SIMILAR RAL6026 3M	3000
1203410867	E22E06021M040	M12 CAT6A M/M ST/ST TPE GREEN TEAL SIMILAR RAL6026 4M	4000
1203410868	E22E06021M050	M12 CAT6A M/M ST/ST TPE GREEN TEAL SIMILAR RAL6026 5M	5000
1203410869	E22E06021M060	M12 CAT6A M/M ST/ST TPE GREEN TEAL SIMILAR RAL6026 6M	6000
1203410895	E22E06021M070	M12 CAT6A M/M ST/ST TPE GREEN TEAL SIMILAR RAL6026 7M	7000
1203410870	E22E06021M080	M12 CAT6A M/M ST/ST TPE GREEN TEAL SIMILAR RAL6026 8M	8000
1203410896	E22E06021M090	M12 CAT6A M/M ST/ST TPE GREEN TEAL SIMILAR RAL6026 9M	9000
1203410871	E22E06021M100	M12 CAT6A M/M ST/ST TPE GREEN TEAL SIMILAR RAL6026 10M	10000
1203410942	E22E06021M120	M12 CAT6A M/M ST/ST TPE GREEN TEAL SIMILAR RAL6026 12M	12000
1203410943	E22E06021M140	M12 CAT6A M/M ST/ST TPE GREEN TEAL SIMILAR RAL6026 14M	14000
1203410872	E22E06021M150	M12 CAT6A M/M ST/ST TPE GREEN TEAL SIMILAR RAL6026 15M	15000
1203410944	E22E06021M180	M12 CAT6A M/M ST/ST TPE GREEN TEAL SIMILAR RAL6026 18M	18000
1203410873	E22E06021M200	M12 CAT6A M/M ST/ST TPE GREEN TEAL SIMILAR RAL6026 20M	20000
1203410945	E22E06021M230	M12 CAT6A M/M ST/ST TPE GREEN TEAL SIMILAR RAL6026 23M	23000
1203410946	E22E06021M270	M12 CAT6A M/M ST/ST TPE GREEN TEAL SIMILAR RAL6026 27M	27000
1203410947	E22E06021M300	M12 CAT6A M/M ST/ST TPE GREEN TEAL SIMILAR RAL6026 30M	30000
1203410948	E22E06021M340	M12 CAT6A M/M ST/ST TPE GREEN TEAL SIMILAR RAL6026 34M	34000
1203410949	E22E06021M380	M12 CAT6A M/M ST/ST TPE GREEN TEAL SIMILAR RAL6026 38M	38000
1203410950	E22E06021M420	M12 CAT6A M/M ST/ST TPE GREEN TEAL SIMILAR RAL6026 42M	42000
1203410951	E22E06021M460	M12 CAT6A M/M ST/ST TPE GREEN TEAL SIMILAR RAL6026 46M	46000
1203410952	E22E06021M500	M12 CAT6A M/M ST/ST TPE GREEN TEAL SIMILAR RAL6026 50M	50000
1203410953	E22E06021M540	M12 CAT6A M/M ST/ST TPE GREEN TEAL SIMILAR RAL6026 54M	54000
1203410954	E22E06021M570	M12 CAT6A M/M ST/ST TPE GREEN TEAL SIMILAR RAL6026 57M	57000
1203410955	E22E06021M610	M12 CAT6A M/M ST/ST TPE GREEN TEAL SIMILAR RAL6026 61M	61000
1203410956	E22E06021M650	M12 CAT6A M/M ST/ST TPE GREEN TEAL SIMILAR RAL6026 65M	65000
1203410957	E22E06021M700	M12 CAT6A M/M ST/ST TPE GREEN TEAL SIMILAR RAL6026 70M	70000
1203411133	E22E06021M950	M12 CAT6A M/M ST/ST TPE GREEN TEAL SIMILAR RAL6026 95M	95000

TABLE 1

WITH ID CARRIER			
MOLEX P/N	ENGINEERING NO.	DESCRIPTION	LENGTH
1203410999	E22E06021M005H	M12 CAT6A M/M ST/ST TPE GREEN TEAL SIMILAR RAL6026 0.5M-ID	500
1203411031	E22E06021M010H	M12 CAT6A M/M ST/ST TPE GREEN TEAL SIMILAR RAL6026 1M-ID	1000
1203411032	E22E06021M020H	M12 CAT6A M/M ST/ST TPE GREEN TEAL SIMILAR RAL6026 2M-ID	2000
1203411033	E22E06021M030H	M12 CAT6A M/M ST/ST TPE GREEN TEAL SIMILAR RAL6026 3M-ID	3000
1203411034	E22E06021M040H	M12 CAT6A M/M ST/ST TPE GREEN TEAL SIMILAR RAL6026 4M-ID	4000
1203411003	E22E06021M050H	M12 CAT6A M/M ST/ST TPE GREEN TEAL SIMILAR RAL6026 5M-ID	5000
1203411092	E22E06021M060H	M12 CAT6A M/M ST/ST TPE GREEN TEAL SIMILAR RAL6026 6M-ID	6000
1203411093	E22E06021M070H	M12 CAT6A M/M ST/ST TPE GREEN TEAL SIMILAR RAL6026 7M-ID	7000
1203411094	E22E06021M080H	M12 CAT6A M/M ST/ST TPE GREEN TEAL SIMILAR RAL6026 8M-ID	8000
1203411000	E22E06021M100H	M12 CAT6A M/M ST/ST TPE GREEN TEAL SIMILAR RAL6026 10M-ID	10000
1203411035	E22E06021M120H	M12 CAT6A M/M ST/ST TPE GREEN TEAL SIMILAR RAL6026 12M-ID	12000
1203411036	E22E06021M150H	M12 CAT6A M/M ST/ST TPE GREEN TEAL SIMILAR RAL6026 15M-ID	15000
1203411037	E22E06021M200H	M12 CAT6A M/M ST/ST TPE GREEN TEAL SIMILAR RAL6026 20M-ID	20000
1203410918	E22E06021M250H	M12 CAT6A M/M ST/ST TPE GREEN TEAL SIMILAR RAL6026 25M-ID	25000
1203410919	E22E06021M300H	M12 CAT6A M/M ST/ST TPE GREEN TEAL SIMILAR RAL6026 30M-ID	30000
1203410920	E22E06021M350H	M12 CAT6A M/M ST/ST TPE GREEN TEAL SIMILAR RAL6026 35M-ID	35000
1203410978	E22E06021M400H	M12 CAT6A M/M ST/ST TPE GREEN TEAL SIMILAR RAL6026 40M-ID	40000
1203410979	E22E06021M450H	M12 CAT6A M/M ST/ST TPE GREEN TEAL SIMILAR RAL6026 45M-ID	45000
1203410921	E22E06021M500H	M12 CAT6A M/M ST/ST TPE GREEN TEAL SIMILAR RAL6026 50M-ID	50000
1203410980	E22E06021M550H	M12 CAT6A M/M ST/ST TPE GREEN TEAL SIMILAR RAL6026 55M-ID	55000
1203411001	E22E06021M600H	M12 CAT6A M/M ST/ST TPE GREEN TEAL SIMILAR RAL6026 60M-ID	60000
1203410981	E22E06021M650H	M12 CAT6A M/M ST/ST TPE GREEN TEAL SIMILAR RAL6026 65M-ID	65000
1203410982	E22E06021M700H	M12 CAT6A M/M ST/ST TPE GREEN TEAL SIMILAR RAL6026 70M-ID	70000
1203410983	E22E06021M750H	M12 CAT6A M/M ST/ST TPE GREEN TEAL SIMILAR RAL6026 75M-ID	75000
1203411002	E22E06021M850H	M12 CAT6A M/M ST/ST TPE GREEN TEAL SIMILAR RAL6026 85M-ID	85000
1203411038	E22E06021M800H	M12 CAT6A M/M ST/ST TPE GREEN TEAL SIMILAR RAL6026 80M-ID	80000

NOTES:
VOLTAGE RATING: 48 V
CURRENT RATING: 0.5 A
TEMPERATURE RATING:
STATIC: -40 °C TO 80 °C
DYNAMIC: -25 °C TO 80 °C
IP RATING: IP 67 (IN MATED AND LOCKED CONDITION)
TRANSMISSION CHARACTERISTICS ACCORDING TO ISO/IEC 11801 CLASS E_A CHANNEL,
WITH INSERTION LOSS BEING IGNORED FOR CABLE LENGTHS ∠1 m OR ∟65 m
PRODUCT POE++ PERFORMANCED TESTED UP TO 65m LENGTH
PACKAGING: CORDSETS ARE PACKED IN A POLYBAG

CABLE LENGTH TOLERANCES

LENGTH	TOLERANCE
0 m - 1 m	+40 mm
>1 m - 5 m	+60 mm
>5 m - 10 m	+80 mm
>10 m - 20 m	+140 mm
>20 m - 30 m	+160 mm
>30 m	+1% length

FUNCTIONAL SYMBOLS
FA = 0
FC = 0
FD = 0
DIVISIONAL SYMBOLS

THIS DRAWING CONTAINS INFORMATION THAT IS PROPRIETARY TO MOLEX ELECTRONIC TECHNOLOGIES, LLC AND SHOULD NOT BE USED WITHOUT WRITTEN PERMISSION

DIMENSION UNITS: mm
SCALE: 1:1
GENERAL TOLERANCES (UNLESS SPECIFIED)
ANGULAR TOL ± 1.0 °
4 PLACES ±
3 PLACES ±
2 PLACES ± 0.05
1 PLACE ± 0.3
0 PLACES ± 0.5
DRAFT WHERE APPLICABLE MUST REMAIN WITHIN DIMENSIONS

CURRENT REV DESC: CABLE COLOR UPDATED
EC NO: 780754
DRWN: RSCHIEBER 2024/03/20
CHK'D: RSILLER 2024/03/21
APPR: RSILLER 2024/03/21
INITIAL REVISION:
DRWN: RSCHIEBER 2019/05/13
APPR: RSILLER 2020/12/09

THIRD ANGLE PROJECTION | DRAWING: A3-SIZE | SERIES: 120341

molex

CSE M12 CAT6A 8P XC MA STR TPE XM

PRODUCT CUSTOMER DRAWING

DOCUMENT NUMBER	DOC TYPE	DOC PART	REVISION
1203410863	PSD	000	A8

MATERIAL NUMBER	CUSTOMER	SHEET NUMBER
SEE TABLE 1	GENERAL MARKET	2 OF 2

DOCUMENT STATUS	P1	RELEASE DATE	2024/03/21 10:35:13

FORMAT: master_Sized-A3
REVISION: J
DATE: 2020/01/14